ELECTRIC CIRCUITS

"Its rising is from one end of heaven, And its circuit to the other end; And there is nothing hidden from its heat." Psalm 19:6

- Electric circuit: path that an electric current follows; "circuit": to go around; electricity flows in a closed loop from the power source to an electrically operated device and back to the power source
- Simple electric circuit contains three parts:
    1. Source of current (battery or generator); provides (-) and/or (+) charge to get e- moving
    2. Conductors (wires) to carry the e- around the circuit
    3. Load: device that transforms the energy of the electric current into another useful form of energy (lamp, loudspeaker, motor)
- Electricity cannot flow through a circuit if the circuit is broken at any point in the loop; electric current requires a complete circuit in order to flow
  -closed circuit: circuit that contains complete path for e- to flow from source of current, through the load, and back to the source
  -open circuit: gap in the circuit and e- cannot cross and current flow ceases
- Switch: device that opens or closes a circuit; often made of two pieces of conducting metal

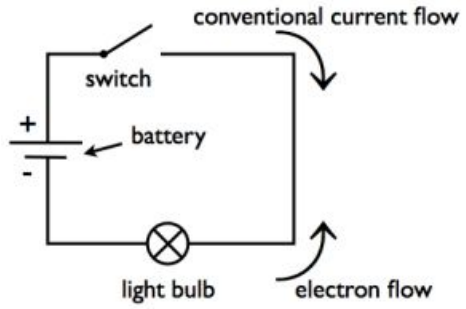

- Current follows the path of least resistance
  Short circuit: electricity has the opportunity to take a "shortcut" through a circuit, avoiding the load; frayed wiring allows conductors to touch around load
- Fuse: narrow strip of metal in a protective case; placed in the circuit between the source of power and the load; if a short circuit occurs, current flowing through fuse increases and fuse burns in half, opening the circuit and halting current flow
- Circuit breaker: automatic switch that opens the circuit when current flowing through exceeds predetermined amount

<u>Circuit arrangements</u>

1. Series circuit: loads are arranged so electric current flows through each load one after the other; current must pass through each load to get to the next one
    - if one bulb burns out, all the bulbs will stop shining bc the burned-out bulb opens the circuit
    - Resistances of individual loads add to each other bc the current must pass through each resistance to get to the next one; total resistance =

sum of loads; light bulbs will shine more dimly if another bulb added to circuit bc added resistance decreases current
- Total voltage in a series circuit equals sum of loads' individual voltages

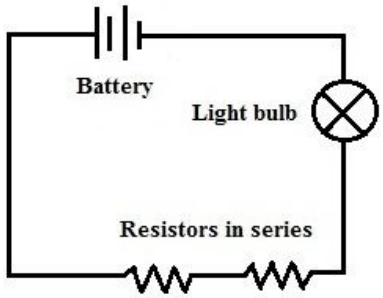

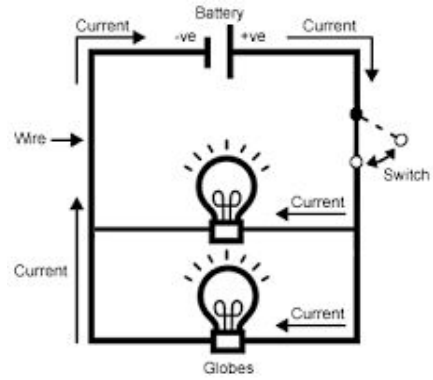

Parallel Circuit

2. Parallel circuit: loads are arranged in separate branches of the circuit; current divided among loads; current flows through all loads simultaneously
- If several light bulbs lit in parallel, one blows out and the rest will continue to burn bc current has more than one way to get through the circuit
- Total resistance reduced as more loads are added in parallel bc more pathways through the circuit are opened
- Total current flowing through the current increases as branches are added; current flowing through each load remains the same
- Current divided so voltages of all the branches in parallel circuit are equal

	Series circuit	Parallel circuit
Total current	Same in all parts	Sum of individual currents
Total resistance	$R_{(total)} = R_1 + R_2 + R_3 + \ldots$	$\frac{1}{R_{(total)}} = \frac{1}{R_1} + \frac{1}{R_2} + \frac{1}{R_3} \ldots$
Total voltage	Sum of individual voltages	Same in all parts

- Homes wired to use parallel circuits; voltage the same at every outlet and each device can draw the current it needs as determined by individual resistance; when one device does not work, does not break circuit and disrupt electricity in rest of appliances